FORT HILLS
NATURAL GAS
LNG VAPORIZER

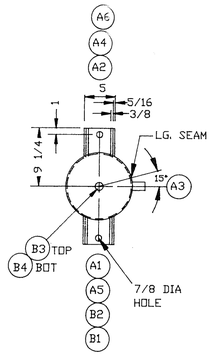

TRUE ORIENTATION
VIEW A-A

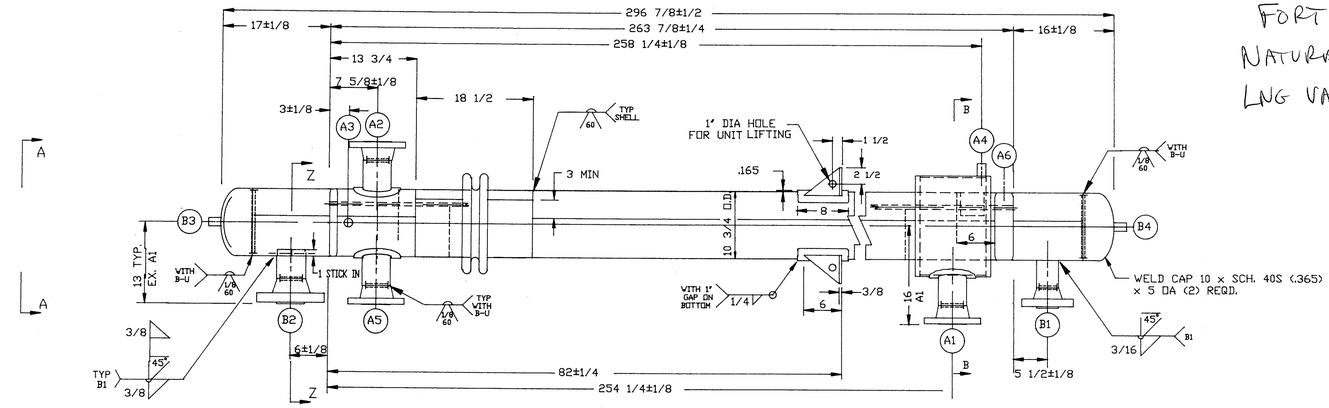

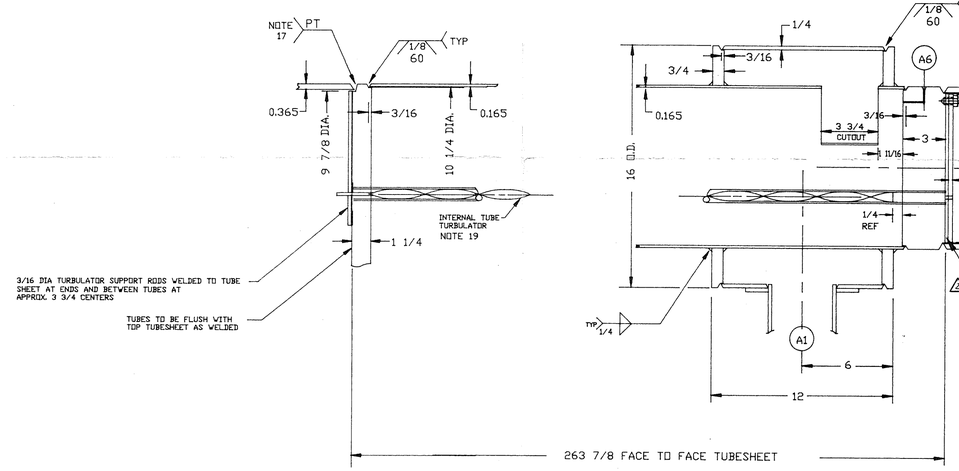

CONSTRUCTION DETAILS

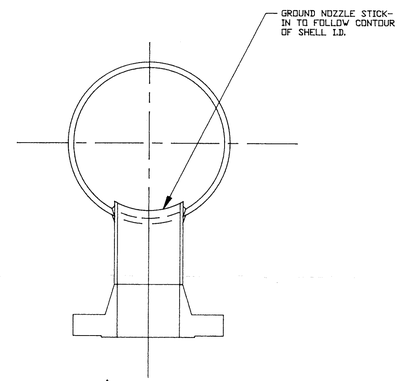

SECTION Z-Z

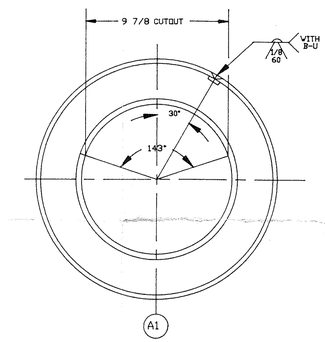

VIEW B-B

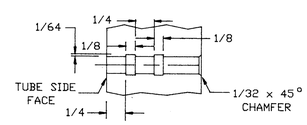

TUBE HOLE GROOVING DETAIL

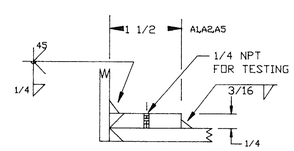

DETAIL 'E'

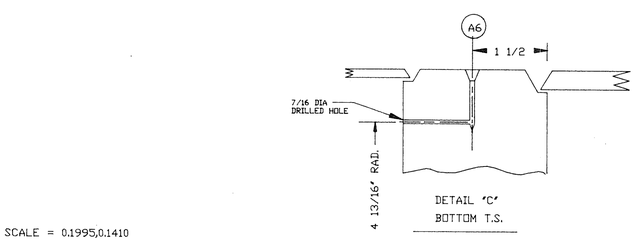

DETAIL 'C'
BOTTOM T.S.

DETAIL SCALE = 0.1995,0.1410
SCALE = 0.083
ALL DIMENSIONS ARE IN INCHES

CONSTRUCTION TO COMPLY WITH ASME CODE SECT. VIII 1989 ED. INCLUDING CERTIFICATE AND STAMP (FORM U -1)
ADDENDA A91
DIVISION 1 TEMA CL. C

FOR INSTALLATION IN STATE OF S.C.

SHELL SIDE	CONDITIONS	TUBE SIDE
200	DES. PRESS. (P.S.I.G.)	700
-270/250	DES. TEMP. (°F) MIN/MAX	-270/250
329	TEST PRESS. (P.S.I.G.)	1151
	DESIGN FLUID	
40 WT% ETHYLENE GLYC		NATURAL GAS
0	CORR. ALLOW. EXC. TUBES	0

WEIGHT (LBS)		
	EMPTY	2143
	FLOODED	2926

	GENERAL NOTES		SHELL	CHAN.	NOT REQ'D.
1	DEHYDRATE				X
2	HALOGEN TEST AT P.S.I.G.	M2892			X
3	AIR AND SOAP TEST AT 15 P.S.I.G.	REINF. PADS	X		
		FACINGS			X
4	X-RAY SPOT [X] FULL [ ]		X	X	
5	POST WELD HEAT TREAT				X
6	SANDBLAST C.S. AFTER FAB. PER SSPC	EXT.			X
		INT.			X
7	PICKLE				X
8	PAINT EXTERIOR C.S. ONE SHOP COAT				X
				REQ.	
9	TUBE END WELDING	SA-8571 MANUAL		X	
		SA-8571 AUTOMATIC			
10	CUSTOMER'S NAME PLATE				X
11	NOZZLE PROTECTION 1/4 TK BOLTED BLIND FLANGES WITH GASKETS	M & L STD.			X
		SPECIAL	X		
12	SPARE PARTS				X
13	IMPACT TEST WELD [ ] BASE [ ] HEAT AFFECTED METAL METAL ZONE [ ]		SHELL		X
			CHAN.		X
14	TOP TUBESHEET: TORQUE CONTROLLED ROLLER EXPAND TUBES INTO TUBESHEET TO A DEPTH OF 1 1/8' BOTTOM TUBESHEET: TORQUE CONTROLLED ROLLER EXPAND TUBES INTO TUBESHEET TO A DEPTH OF 3'				
15	ALL WELDING TO BE IN ACCORDANCE WITH M&L PROCEDURES (SMAW)71 (GMAW)63, (GTAW)32, (FCAW)138.				
16	PREPARATION FOR SHIPMENT : (a) NOZZLE PROTECTION PER NOTE 11 (b) VACUUM DRY (c) PURGE UNIT WITH DRY NITROGEN TO 0 PSI (d) THREADED OPENINGS COVERED WITH METAL PLUGS				
17	LIQUID PENETRANT EXAMINE CUT SURFACES OF TUBESHEET BEFORE & AFTER WELDING				
18	LIQUID PENETRANT EXAMINE ALL NOZZLE TO VESSEL ATTACHMENT WELDS. ACCEPTANCE CRITERIA SECTION VIII DIVISION 1				
19	TURBULATORS FOR 3/4 OD X 16 BWG AVG WALL TUBES W/ ID BETWEEN .633 AND .605(SS-304) WITH A 3/16 DIA HOLE AT ONE END OF EACH TURBULATOR DA=261 1/4 PITCH= 4' MATERIAL SS-304				
20	ALL SMAW WELDING TO BE WELDED USING ELECTRODS COMPLYING WITH SFA 5.4 CLASSIFICATION E-310-15 OR 16				

REV.	DESCRIPTION	BY	DATE	CK
2	ADDED NOTE # 20 AND FINALIZED DRAWING.	JB	3/16/93	TR
1	REV. PER CUSTOMERS MARKED PRINT DATED 1/14/93	JB	1/22/93	TR

REFERENCE DRAWINGS
T.S. DRILLING TEMPLATE BT-21888
BENDING DETAILS
DETAILS B-21893 ORIFICE PLATE

CERTIFIED CORRECT FOR JOB NO. 269930
BY T. Rozzynski DATE 3/18/93

SHOP	DATE		1/25	3/16
CUST.	REPRO.			
	PRINTS	3		11
	DATE	12/29		3/18
ISSUED	REVISION	0	1	2

CUSTOMER : CBI Na-CON, INC.
P.O. NO. : E20141-002
ENGINEERS :
NO. OF UNITS REQUIRED : ONE (1)
M & L SERIAL NO. :
NAT'L BD. NO. :
TAG. : E3

CBI NA-CON CONTRACT E-20141
LNG SATELLITE MODIFICATION 1

INSPECTION BY CUSTOMER REQ'D [ ] NOT REQ'D [ ]

M & L JOB NO. 269930

MANNING & LEWIS ENGINEERING CO.
675 RAHWAY AVENUE UNION N.J. 07083

10-264 LNG VAPORIZER

TEMA TYPE BEM VER

SCALE	MADE	CKD.	DATE	DRAWING NO.	REV
1:12.089	JH	TR	11/30/92	D- 21887	2

PART	CARBON STEEL SA 53 B	SA 106 B	SA 285 C	SA 515 70	SA 516 70	SA 105	STAINLESS STEEL 304 SA 312	SA 240	SA 182	SA ELC
LIQUID: BARREL							X			
UNIT FLANGE										
FORMED HEAD										
NOZZLE NECK							X			
NOZZLE FLG.									X	
EXP. JOINT										
CONE										
REINF. PAD										
SCR. FTGS.									X	
WELD FTGS.										
BONNET OR CHAN.: BARREL							X			
UNIT FLANGE										
FORMED HEAD										
NOZZLE NECK							X			
NOZZLE FLG.									X	
COVER										
REINF. PAD										
SCR. FTGS.									X	
WELD FTGS.							SA-403-WPW			

NOTE 'G'

PART	C S SA 285 C	SA 515 70	SA 516 70	SS SA 240 304	SA ELC
TUBE SHT.				X	

TUBES	CS SA 214	SA 179	SA 249	SS 304 SA 213	SA ELC
AVG.	X				
MIN.				X	

STUDS		NUTS	
SA 193 B7	X	SA 194 2H	X

GASKETS	SHELL	CHAN.
* COMP. NON ASBESTOS		
* AT BOTTOM T.S.		

	CS	SS
DBL. JKT. ASB.		
SPIRAL WOUND		
PACKING		
MISCELLANEOUS	CS	SS
BAFFLES		X 304
TIE RODS, SPACERS		X 304
IMPINGEMENT BAF.		X 304
PASS PARTITIONS		
UNIT SUPPORTS		X 304
SUPPORT PAD		X 304
BACK-UP STRIP		X 304/304ELC
TURBULATORS		X 304
SEALING STRIPS	SS 302	

MATERIAL NOTES

A STAINLESS STEEL ELC (EXTRA LOW CARBON) (0.03 % CARBON MAX.)
B SA 312 IS WELDED PIPE UNLESS INDICATED BY 'S' (FOR SEAMLESS)
C THE LETTER 'F' INDICATES FACING OF THE MATERIAL UNDER WHICH IT APPEARS.
D SA 53 GR.B IS SEAMLESS PIPE.
E STAINLESS STEEL NOZZLES THROUGH 6' IPS MADE FROM PIPE OVER 6"IPS MADE FROM PLATE.
F NOZZLES FLANGES, SCREWED & WELDED FITTINGS CONFORM TO CURRENT ANSI STANDARDS UNLESS OTHERWISE STATED
G COMMERCIAL EXP. JT. W/SA-312-304 WELD ENDS & SA-240-321 BELLOWS. 1.1899' MOVEMENT CLOSES (2) REINFORCED CORRUGATIONS

NOZZLE SCHEDULE

MK.	SIZE	RTG.#	FACE	TYPE	NECK	REMARKS	SERVICE
A1	4	150	RF	WN	0.237	DET.E	INLET
A2	4	150	RF	WN	0.237	DET.E	OUTLET
A3	3/4	3000	–	FC	PLUG		VENT
A4	3/4	3000	–	FC	PLUG		DRAIN
A3	2	150	RF	WN	0.154	DET.E	SAFETY
A6	1/4	–	–	NPT	PLUG	DET.C	DRAIN
B4	3/4	3000	–	FC	PLUG		DRAIN
B3	3/4	3000	–	FC	PLUG		VENT
B2	4	400	RF	WN	0.337		OUTLET
B1	3	400	RF	WN	0.216		INLET

BAFFLES
* H=HORIZONTAL
V=VERTICAL, D=SEE DETAIL

NO. 31	PITCH 8 1/8	NO. 81	LG. 264
DIA. 10 5/16	CUT 34 %	O.D. 3/4	PITCH 15/16
TK. 1/8	CUT H *	BWG. 16	PASSES 1

TUBES
FOR U - TUBES LG=LENGTH OVER TUBE BUNDLE.

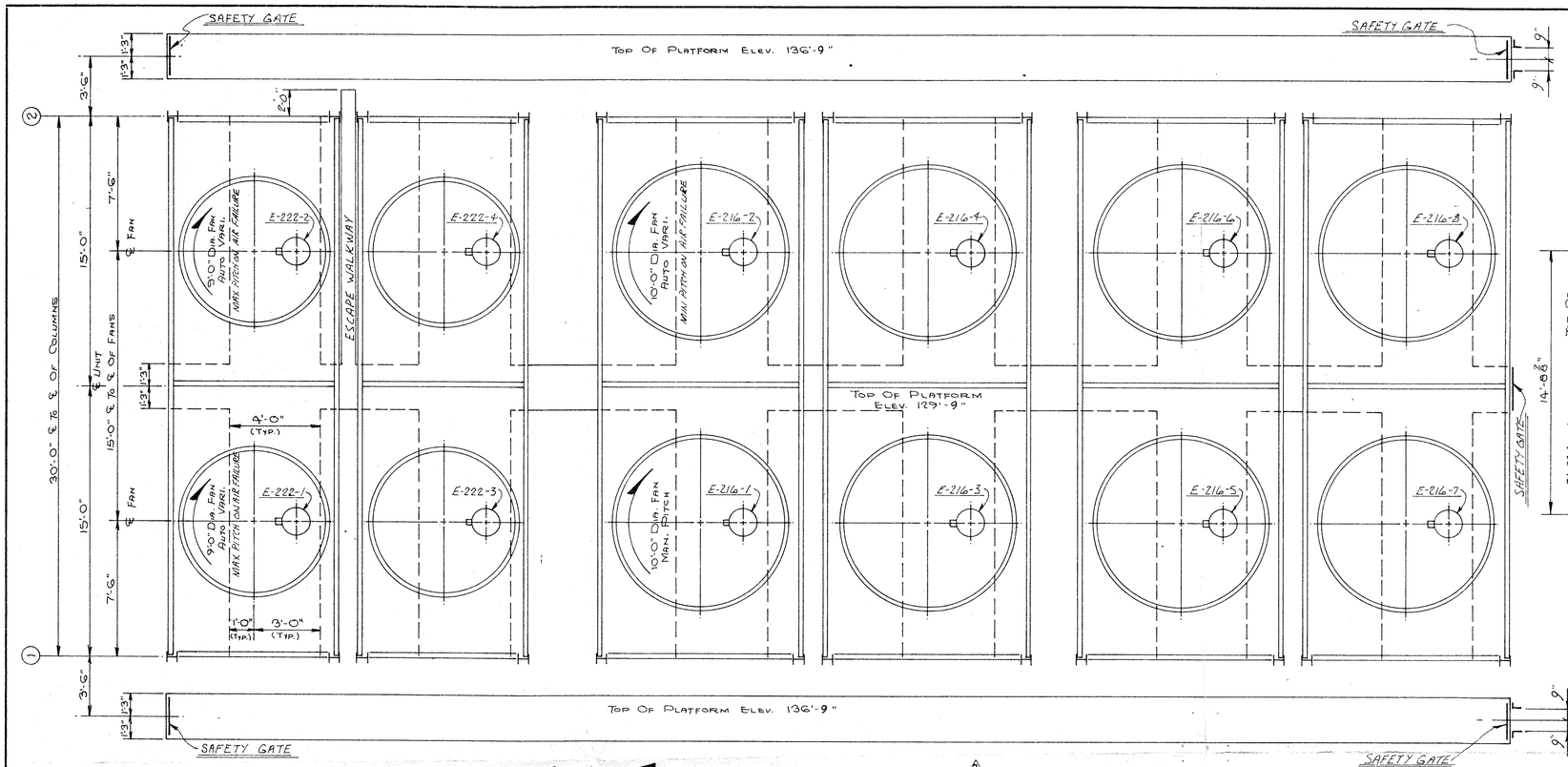

PLAN VIEW
W/ COILS REMOVED

ITEM	EMPTY WT.	FLOODED W.T.
E-216	34,700	37,000
E-222	30,500	31,900

ⓐ ~ 10"-150# RFWN FLG. SCH 80 INLET
ⓑ ~ 8"-150# RFWN FLG. SCH 80 OUTLET
ⓒ ~ 4"-300# RFWN FLG. SCH 160 INLET & OUTLET
ⓓ ~ 3"-150# RFWN FLG. SCH 80 INLET & OUTLET
ⓕ ~ ¾"-6000# CPLG W/PLUG VENT & DRAIN
ⓖ ~ ¾"-6000# CPLG W/PLUG PRESSURE CONN.
ⓗ ~ 1"-6000# CPLG W/PLUG TEMPERATURE CONN.

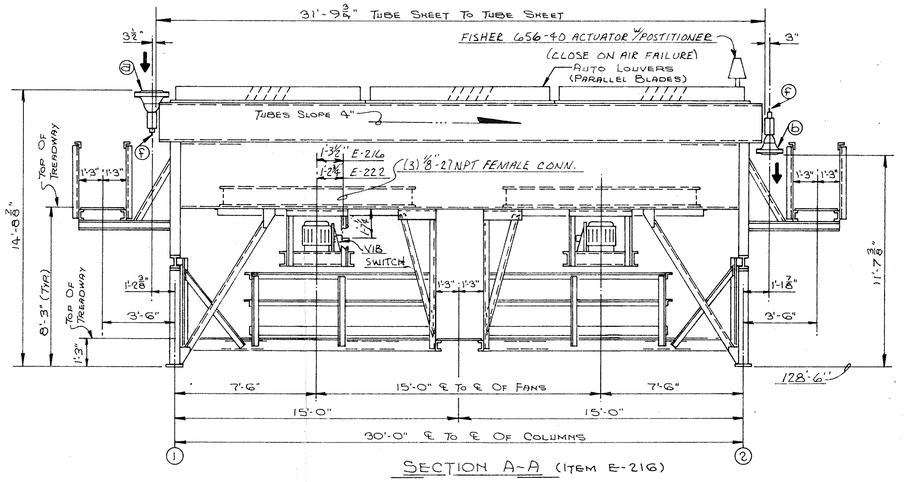

SECTION A-A (ITEM E-216)

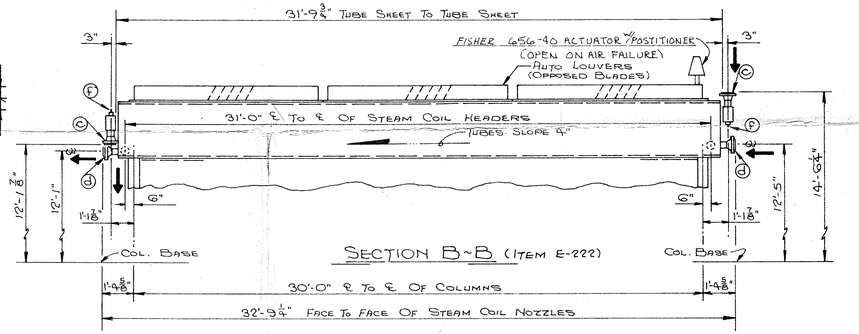

SECTION B-B (ITEM E-222)

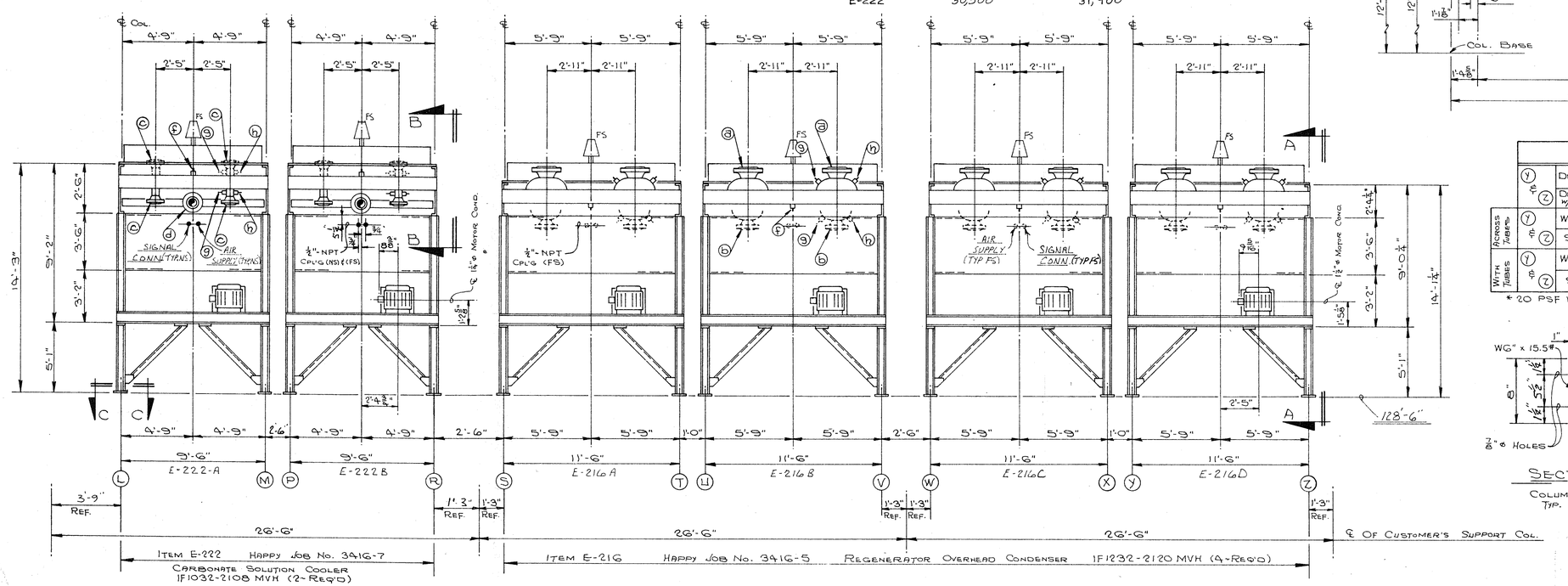

FRONT ELEVATION
(HEADER & MAINTENANCE WALKWAYS NOT SHOWN)

			① & ②
	①	DEAD LOAD	9,627
	②	DEAD LOAD W/WATER	10,339
ACROSS TUBES	①	WIND LOAD *	1,943
	②	SHEAR	985
WITH TUBES	①	WIND LOAD *	282
	②	SHEAR	372

* 20 PSF WIND

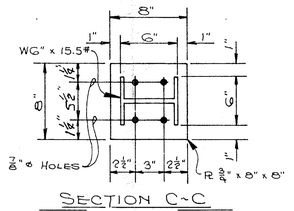

SECTION C-C
COLUMN BASE PLATE
TYP. 24 PLACES

CUSTOMER: PHILADELPHIA GAS WORKS
CUSTOMER'S RO. No.: PPG 115 1776
ITEM No.: E-216 & E-222
PLANT LOCATION: PHILADELPHIA, PA.
FOR PARTS LIST ON JOB 3316-5, ITEM No. E-216, SEE DWG. No. B-35883.
FOR PARTS LIST ON JOB 3316-7, ITEM No. E-222, SEE DWG. No. B-35884.

FOSTER WHEELER JOB NO. 15-1770

FOSTER WHEELER REQ. No.	ITEM No.	PGW EQUIP. No.
1776-1231 A	E-102	2-154-03
1776-1231 B	E-104	2-154-02
1776-1231 C	E-106	2-154-01
1776-1231 D	E-208	2-154-04
1776-1231 E	E-209	2-154-05
1776-1231 F	E-215	2-154-06
1776-1231 G	E-216	2-154-07
1776-1231 H	E-220	2-154-08
1776-1231 J	E-221	2-154-09
1776-1231 K	E-222	2-154-10
1776-1231 L	E-223	2-154-11
1776-1231 M	E-224	2-010-10

ITEM E-222 ZINC FLAME SPRAY HEADS. ITEM E-216 NO FINISH ON HEADS. ALL STRUCTURE STEEL GALVANIZE. PER API-661.

PGW DWG. #801228-35632-1B

3416-5 & -7
10-6-77

happy division — therma technology, inc. TULSA, OKLA.		
SCALE:	APPROVED BY: Paul Lurney	DRAWN BY Joey
DATE: 5-16-77		REVISED
DIMENSIONAL		
HAPPY JOB No.: 3416-5 & 3416-7		DRAWING NUMBER D-8036.2

⚠ REVISED PER CUSTOMER MARKED UP PRINTS 6-20-77
⚠ ADDED EQUIP WEIGHTS 8-K 10-6-77