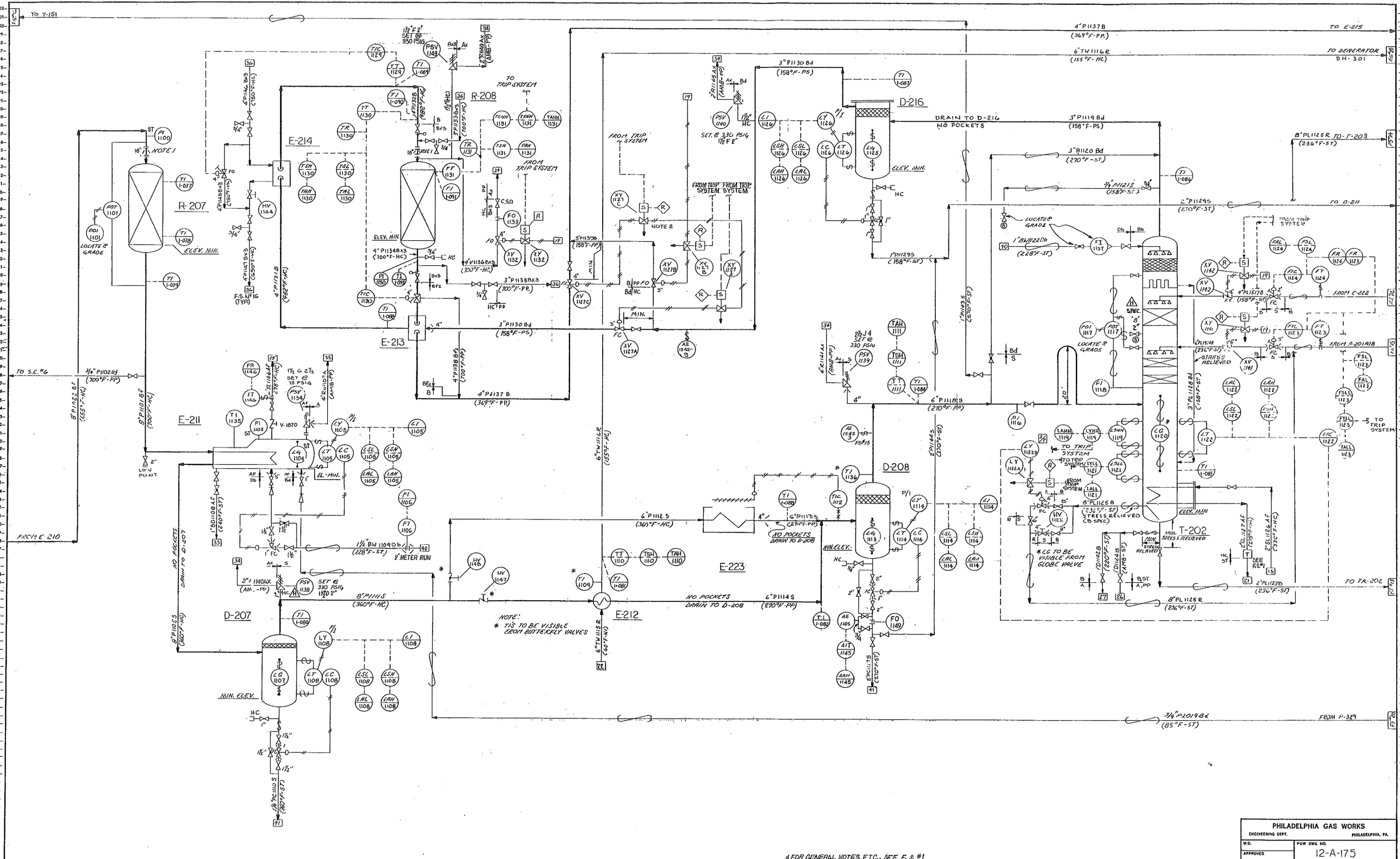

4 FOR GENERAL NOTES, ETC., SEE F.S. #1

LEGEND																															
01	COOLING WATER SUPPLY (GLYCOL-WTR)	10	150# DESUPERHEATED STM	21	STEAM CONDENSATE	28	OILY OR DIRTY WATER SEWER	35	PUMPOUT	50	LRG START UP GAS	43	PROCESS CONDENSATE	58	150# STEAM CONDENSATE	03			
02	COOLING WATER RETURN (GLYCOL-WTR)	07	POTABLE WATER	22	TREATED WATER	29	CHEMICAL WASTES	36	PURGE GAS (NITROGEN)	51	PIPELINE GAS (NAT. GAS)	44	BARKWATER (1)	07					
33	950# H.P. STEAM	08	PLANT AIR	23	FUEL OIL (KAPTHA)	30	SANITARY SEWER	37	BLOWDOWN	52		45	FUEL GAS (STRETFORD)	16					
34	150# ATOMIZING STEAM	13	INSTRUMENT AIR	24	FUEL GAS (NATURAL GAS)	31	FIRE WATER	38	FLARE	53		46	DOUR WATER	17					
35	50# L.P. STEAM	05		25	CLEAN WATER SEWER	32	FLUSHING OIL	39	TO ATMOSPHERE	54		47	PRESSURIZATION AIR	18					
										55	BOILER FEED WATER			19					

NOTES

1) REMOVABLE SPOOL PIECE FOR DISTRIBUTOR ACCESS
2) ONE RESET PUSHBUTTON PER SYSTEM. INDIVIDUAL SOLENOID VALVES HAVE INTERNAL NEEDLE VALVE ADJUSTMENT TO ENSURE THAT, ON TRIP BYPASS VALVE OPENS BEFORE BLOCK VALVE(S) CLOSE(S) AND THAT ON RESET, BLOCK VALVE(S) OPEN BEFORE BYPASS VALVE CLOSES
3) 36 CONTINUED ON F.S. #16

ITEM NO.	E-211	E-212	E-213	E-214	E-223
SERVICE	RECYCLE GAS CO2 STEAM GENERATOR	TREATED WATER DEAERATOR	RECYCLE DISTRIBUTOR FOR CALCINER	RECYCLE DISTRIBUTOR START-UP HEATER	RECYCLE GAS TRIM COOLER
SHELL DES. P. & T.	75 PSIG/350°F	165 PSIG/205°F	330 PSIG/650°F	275 PSIG/800°F	—
TUBE DES. P. & T.	330 PSIG/150°F	330 PSIG/410°F	330 PSIG/150°F	330 PSIG/650°F	330 PSIG/410°F
SURFACE	737 FT²	315 FT²	117 FT²	48 FT²	8322 FT²
MATL. SHELL	C.S.	CS W/SS CLAD	C.S.	C.S.	—
MATL. TUBE	S.S.	SS	C-½ Mo.	C.S.	S.S.
INSULATION	HC	HC	HC	HC	NI

ITEM NO.	T-202	R-207	R-208	D-207	D-208	D-216
SERVICE	RECYCLE GAS CO2 ABSORBER	RECYCLE GAS CO CONVERTER	RECYCLE GAS METHANATOR	RECYCLE CO CONVERTER MAKEUP KO DRUM	RECYCLE ABSORBER FEED KO DRUM	RECYCLE ABSORBER OVHD. K.O. DRUM
SIZE	8'0"D x 0'10'0" 6"	6'3"D x 17'.9"	5'6"D x 7'0"	2'6"D x 8'-4"	2'0"D x 8'-7"	1'6"D x 5'-11"
DES. PRESS-TEMP.	335 PSIG/350°F	330 PSIG/150°F	330 PSIG/850°F	334 PSIG/410°F	332 PSIG/320°F	332 PSIG/210°F
OPER. PRESS-TEMP.	281 PSIG/120°F	271 PSIG/100°F	274 PSIG/100°F	285 PSIG/360°F	281 PSIG/170°F	279 PSIG/150°F
MATERIAL	C.S.	C-½ Mo	1¼Cr-½Mo	C.S./SS CLAD	CS/SS CLAD	CS/SS CLAD
INSULATION	HC	HC	HC	HC	PS	PP

REVISIONS																	
H	10-31-79	AS-BUILT	G	3-16-79	FINAL	F	OP. MAN. ISSUE	7/20/78	E	12-28-77	RELEASED FOR ERECTION	D	8-10-77	PGW COMMENTS/MODEL REVIEW	C	5/2/77	GENERAL REVISION
B	2-14-77	PROCESS ISSUE	A	1-15-77	DEFINITIVE ESTIMATE												

FORM-135-29C REV.

PHILADELPHIA GAS WORKS
ENGINEERING DEPT. PHILADELPHIA, PA.

W.O.
APPROVED
PGW DWG. NO. 12-A-175

ITEM NOS. THIS DWG.
T-202
R-207
R-208
D-207
D-208
D-216
E-211
E-212
E-213
E-214
E-223

This Drawing is the Property of the FOSTER WHEELER CORPORATION 110 SOUTH ORANGE AVENUE, LIVINGSTON, N.J. AND IS LENT WITHOUT CONSIDERATION OTHER THAN THE BORROWER'S AGREEMENT THAT IT SHALL NOT BE RE-PRODUCED, COPIED, LENT, OR DISPOSED OF DIRECTLY OR INDIRECTLY NOR USED FOR ANY PURPOSE OTHER THAN THAT FOR WHICH IT IS SPECIFICALLY FURNISHED. THE INFORMATION EMBODIED IN THE DRAWING IS COVERED BY PATENTS.

ENGINEERING FLOW DIAGRAM
RECYCLE GAS CO_2 REMOVAL
SECTION 200 CATALYTIC RICH GAS UNIT
60 MM SCFD SNG PLANT
PHILADELPHIA GAS WORKS
PHILADELPHIA PENNSYLVANIA

EST. NO.
CONTRACT NUMBER 15-1779
DRAWN BY L.G. 11-21-77 SH. 1 OF 1
DWG. NO. -1779-1-50-11 A