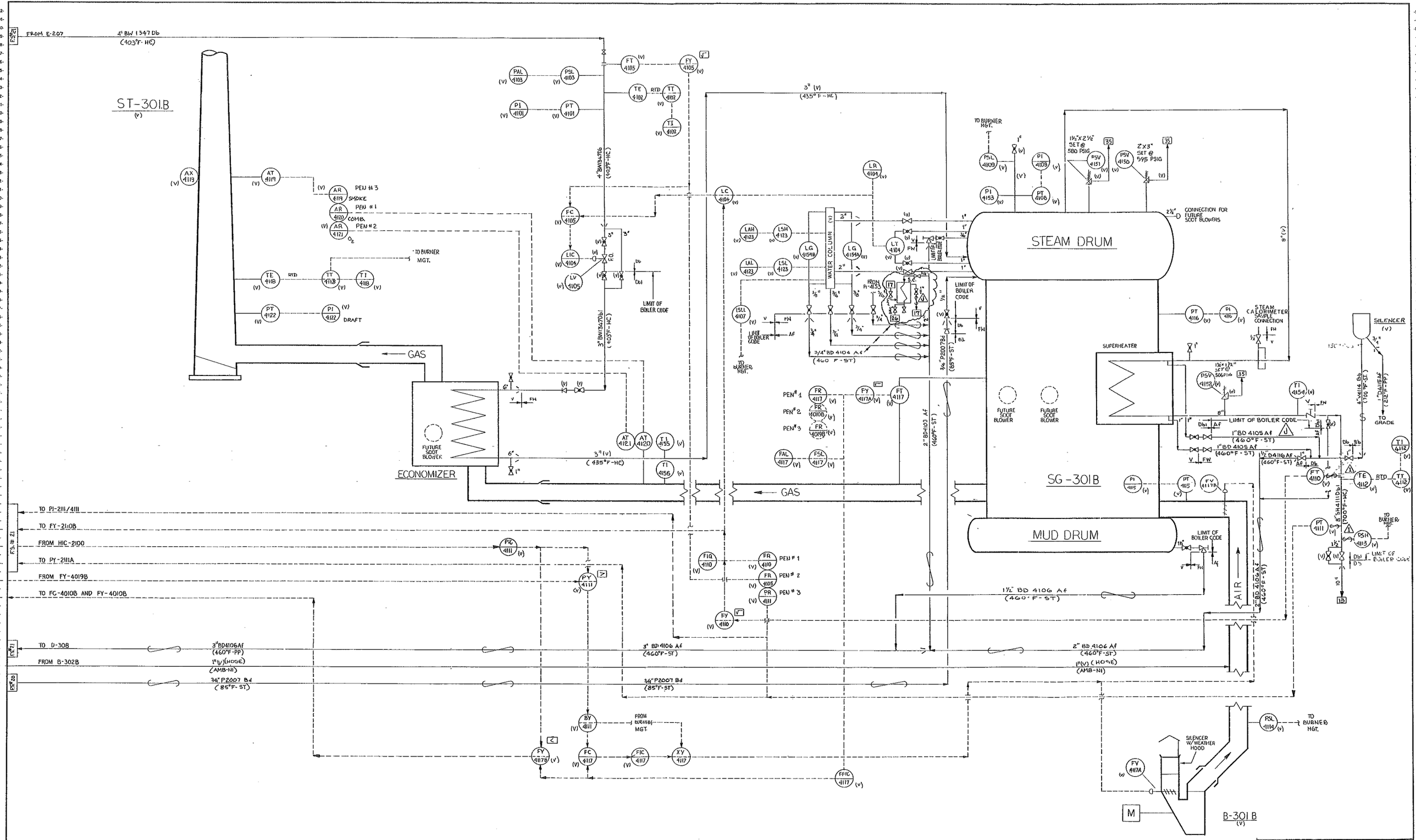

LEGEND													
CW	COOLING WATER SUPPLY (GLYCOL-NTR)	SD	15# DESUPERHEATED STEAM	A	STEAM CONDENSATE	SW	OILY OR DIRTY WATER SEWER	PO	PUMPOUT	SG	GAS START-UP GAS	PC	PROCESS CONDENSATE
CR	COOLING WATER RETURN (GLYCOL-NTR)	PW	POTABLE WATER	TW	TREATED WATER	CS	CHEMICAL WASTES	PG	PURGE GAS (NITROGEN)	PL	PIPELINE GAS (NAT. GAS)	RW	RAW WATER
HS	450# H.P. STEAM	PA	PLANT AIR	FO	FUEL OIL (KAPATHA)	SS	SANITARY SEWER	BD	BLOWDOWN	IG	INERT GAS (CO2)	FG	FUEL GAS (STRETFORD)
IS	150# ATMIZING STEAM	IA	INSTRUMENT AIR	FG	FUEL GAS (NATURAL GAS)	FW	FIRE WATER	FL	FLARE	BF	BOILER FEED WATER	SW	SOUR WATER
LS	50# L.P. STEAM	HC	H.P. CONDENSATE	CW	CLEAN WATER SEWER	FO	FLUSHING OIL	TA	TO ATMOSPHERE			PA	PRESSURIZATION AIR
												FS	FIS STEAM CONDENSATE

NOTES

(1) FOR SG-301A, SEE 1779-1-50-21
(2) FOR BURNER PIPING AND CONTROLS SEE 1779-1-50-40
(3) (V) INDICATES BY VENDOR
(4) FOR GENERAL NOTES, ETC., SEE FLOW SHEET No 1

ITEM NO.	SG-301B	D-308	ST-301B	B-301B
SERVICE	AUX. STM. GENERATOR	BLOWDOWN DRUM	STACK	FORCE DRAFT FAN
SIZE	90000 PPH	6'-0 X 10'-0		
DES. PRESS-TEMP.		27P.S/260°F		
OPER. PRESS-TEMP.	460PSIG/700°F	0 PSIG/212°F		
	TO RATIO 7:1			
MATERIAL	C.S.			
INSULATION	YES (HC)	YES (PP)	NO	NO

ITEM NO.	
SERVICE	
S.G. AT P.T.	
DES. G.P.M. AT P.T.	
DES. DIFF. P.S.I.	
MAX. DISCH. P.S.I.G.	
MATERIAL	
INSULATION	

ITEM NO.	
SERVICE	
SHELL DES. P. & T.	
TUBE DES. P. & T.	
SURFACE	
MATL. SHELL	
MATL. TUBE	
INSULATION	

REVISIONS																							
I	11-8-79	AS-BUILT	H	3-16-79	FINAL	G	OP. MAN ISSUE	7/20/78	F	4-12-78	RELEASED FOR ERECTION	E	2-16-78	GENERAL REVISION	D	1-6-78	GENERAL REVISION	C	11-11-77	REDRAWN FROM 1779-1-50-21	B	NOT ISSUED	A	NOT ISSUED

ITEM NOS. THIS DWG.
SG-301B
ST-301B
B-301B

PHILADELPHIA GAS WORKS
ENGINEERING DEPT. PHILADELPHIA, PA.

W.O.
APPROVED
PGW DWG. NO. 12-A-461

This Drawing is the Property of the
FOSTER WHEELER ENERGY CORPORATION
110 SOUTH ORANGE AVENUE, LIVINGSTON, N.J.

AND IS LENT WITHOUT CONSIDERATION OTHER THAN THE BORROWER'S AGREEMENT THAT IT SHALL NOT BE REPRODUCED, COPIED, LENT, OR DISPOSED OF DIRECTLY OR INDIRECTLY, NOR USED FOR ANY PURPOSE OTHER THAN THAT FOR WHICH IT IS SPECIFICALLY FURNISHED. THE APPARATUS SHOWN IN THE DRAWING IS COVERED BY PATENTS.

ENGINEERING FLOW DIAGRAM
SECTION 300 SUPPORT FACILITIES
STEAM GENERATION
60 MM SCFD SNG PLANT
PHILADELPHIA GAS WORKS
PHILADELPHIA PENNSYLVANIA

EST. NO. | DRAWN BY: DSR 11-8-77 | SH. 41 OF 41
CONTRACT NUMBER 15-1779 | DWG. NO. 1779-1-50-41 | J