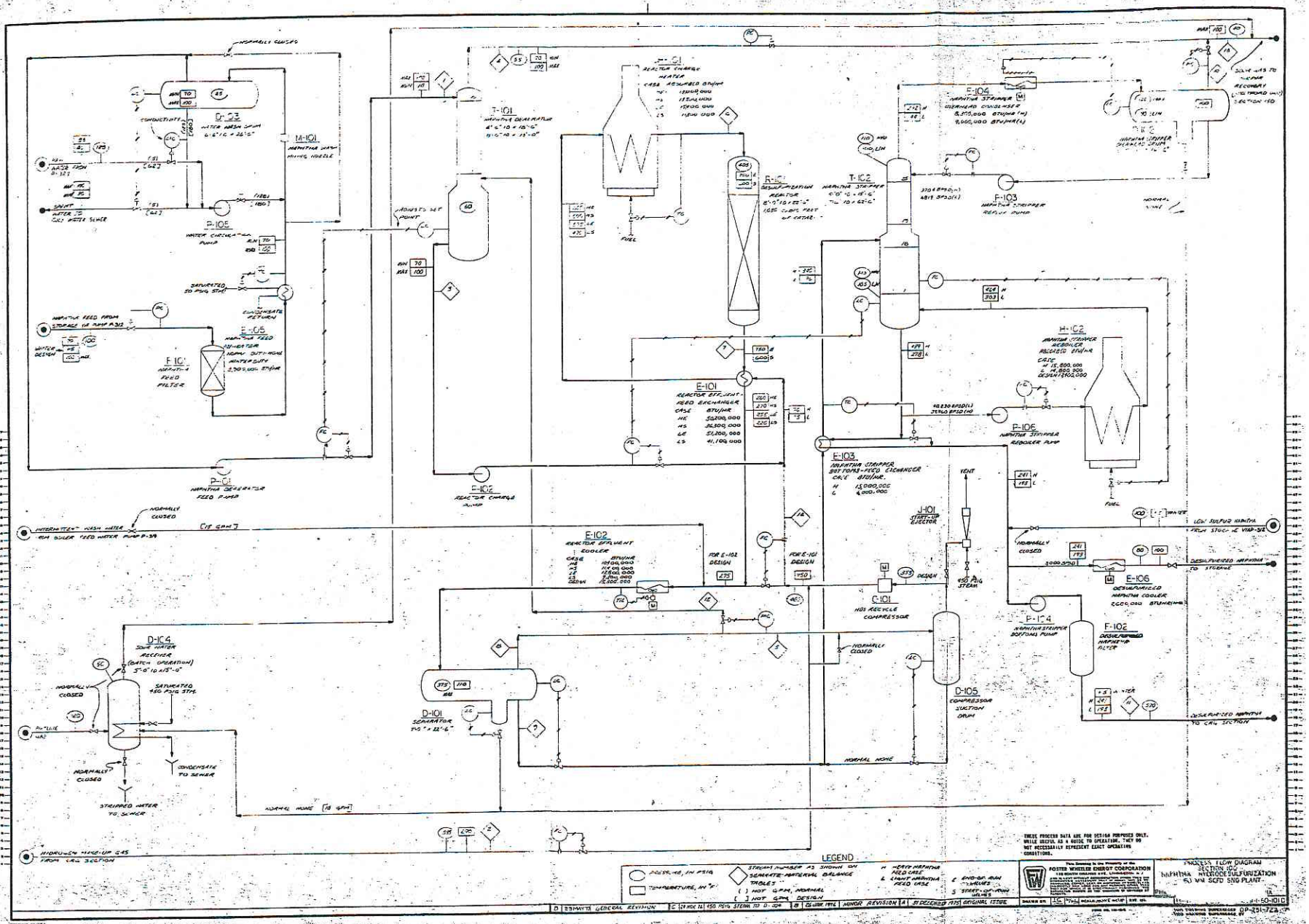
NAPHTHA DEHEXANIZER FEED PUMP
NAPHTHA DEHEXANIZER
T-101
NAPHTHA DEAERATOR
P-105
WATER CIRCULATING PUMP
E-105
NAPHTHA FEED PRE-HEATER
F-101
NAPHTHA FEED FILTER
NAPHTHA FEED FROM STORAGE VIA PUMP P-313
NAPHTHA NOZZLE
REACTOR CHARGE HEATER
R-101
DESULFURIZATION REACTOR
REACTOR CHARGE PUMP
E-101
REACTOR EFF.-FEED EXCHANGER
E-102
REACTOR EFFLUENT COOLER
T-102
NAPHTHA STRIPPER
F-103
NAPHTHA STRIPPER REFLUX PUMP
E-104
NAPHTHA STRIPPER OVERHEAD CONDENSER
H-102
NAPHTHA STRIPPER REBOILER
P-106
NAPHTHA STRIPPER REBOILER PUMP
E-103
NAPHTHA STRIPPER BOTTOMS-FEED EXCHANGER
J-101
START-UP EJECTOR
C-101
H2S RECYCLE COMPRESSOR
D-105
COMPRESSOR SUCTION DRUM
P-104
NAPHTHA STRIPPER BOTTOMS PUMP
E-106
DESULFURIZED NAPHTHA COOLER
F-102
DESULFURIZED NAPHTHA FILTER
D-104
SOUR WATER RECEIVER
D-101
SEPARATOR
INTERMITTENT WASH WATER FROM SULFUR FEED WATER PUMP P-319
HYDROGEN MAKE-UP GAS FROM GAS SECTION
LOW SULFUR NAPHTHA FROM STORAGE VIA P-312
DESULFURIZED NAPHTHA TO STORAGE
DESULFURIZED NAPHTHA TO GAS SECTION
NORMAL HOME
LEGEND
THESE PROCESS DATA ARE FOR DESIGN PURPOSES ONLY. WHILE USEFUL AS A GUIDE TO OPERATION, THEY DO NOT NECESSARILY REPRESENT EXACT OPERATING CONDITIONS.
POSTER WHEELER ENERGY CORPORATION
PROCESS FLOW DIAGRAM
SECTION 100
NAPHTHA HYDROGEN SULFURIZATION
50 MM SCFD SNG PLANT
DP-251-1-72A
D 23 MAY 75 GENERAL REVISION
C 29 NOV 74 150 PSIG STEAM TO D-104
B 15 JUNE 1974 MINOR REVISION
A 31 DECEMBER 1973 ORIGINAL ISSUE